ENGINEERING
TOMORROW

Data Sheet

Thermostatic expansion valves Type **TGE**

The TGE series of thermostatic expansion valves have balanced port design



TGE is a dedicated designed series of thermostatic expansion valves for all standard refrigerants.

The tight design meets the environmental demands for today and future. Versions for non standard refrigerants can be produced to order.

Applications

- Water chillers
- Bus A/C
- Rooftop units
- Heat pumps
- Refrigerated containers
- Others A/C and refrigeration system

Features

- Refrigerants: R410A, R32, R452B, R454B, R22, R134a, R1234ze, R407F, R407A, R404A, R507, R407C and R290
- Capacity range: 3.5 – 52 TR / 12 – 182 kW for R410A
- Balance port design
- Biflow with expansion in both directions
- Low hysteresis
- Long lifetime for heat pump applications
- Mechanical connections types solder ODF, flare, MIO, ORFS are available
- Laser welded, stainless steel power element, capillary tube, and bulb
- MOP (Max. Operating Pressure) function is available
- Optional bleed function
- PS / MWP (maximum working pressure): 49 bar/ 711 psig
- Straightway flow
- Adjustable superheat setting
- UL certified

Functions

Figure 1: Balanced port design TGE 10

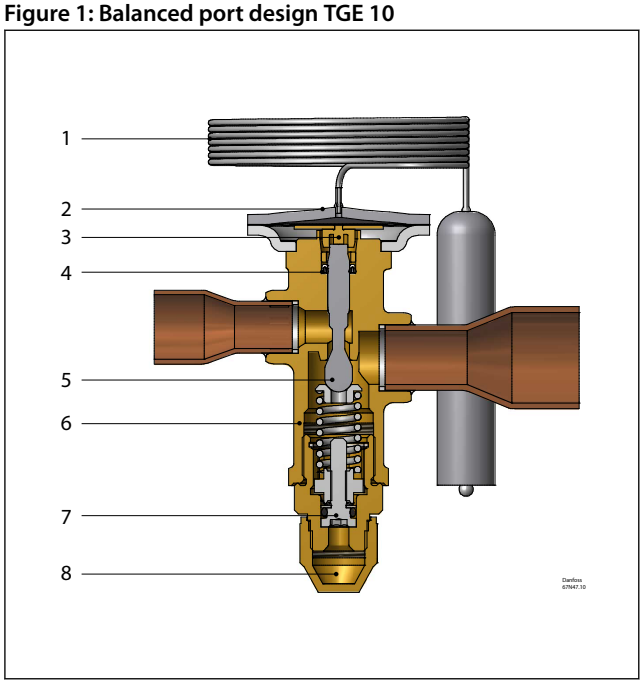

Figure 2: Double balanced port design TGE 20 and TGE 40

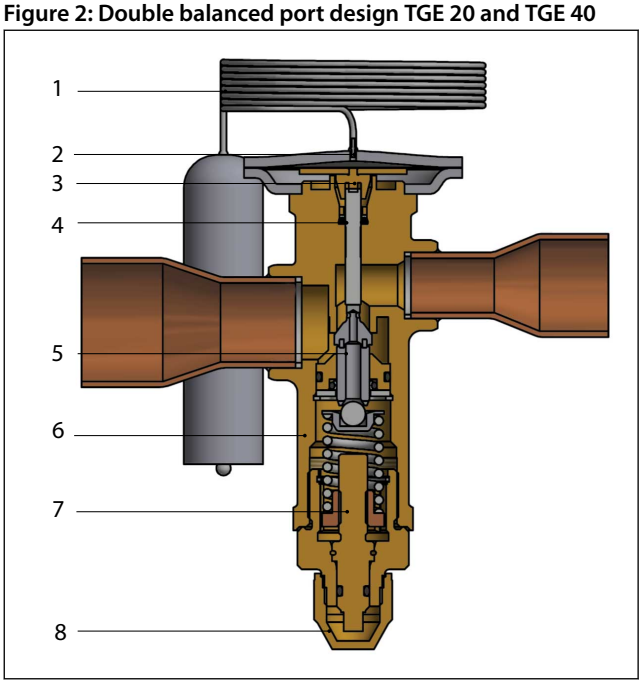

1	Bulb with capillary tube	**5**	Cone
2	Thermostatic element	**6**	Valve body
3	Thrust pad	**7**	Static SH adjustment spindle
4	Push pin seal	**8**	Protective cap

Balanced port design and advantage

The TGE series of thermostatic expansion valves have balanced port design.

Balanced port design prevents changes in pressure drop across the valve from influencing operation and provides excellent control on applications having widely varying operating conditions.

Balanced port TXV's are recommended in refrigeration and air conditioning systems with any combinations of these conditions:

1. Widely varying head pressures
2. Widely varying evaporator loads
3. Widely varying pressure drop across the TXV
4. Fluctuating or extremely low liquid temperatures
5. Intermittent liquid line flash gas

TGE valves are designed for biflow operations. TGE 10 has minor capacity reduction in reverse flow.

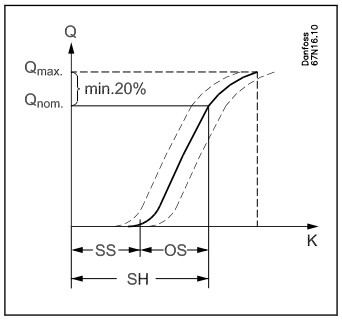

The central push pin is fitted with a robust seal (Pos 4) that ensures maximum tightness for the life of the valve.

Static superheat (SS) can be adjusted by the setting spindle (Pos 7), see Figure 1: Balanced port design TGE 10 & .Figure 2: Double balanced port design TGE 20 and TGE 40

The standard superheat setting (SS) is 4K / 7.2 °F and adjustable for 0 – 8K / 0 – 14.4 °F.

SS = Static Superheat

OS = Opening Superheat

SH = SS + OS = total superheat

Example:

Static superheat SS = 4K / 7.2 °F

Opening superheat OS = 4K / 7.2 °F

The opening superheat is 4K / 7.2 °F, i.e. from the point the valve begins to open up to rated capacity. Opening superheat is determined by the design and cannot be changed.

Total superheat SH = SS + OS

SH = 4 + 4 = 8K / 14.4 °F

Total superheat SH can be altered by changing SS (by using the setting spindle).

Applications

Figure 3: A diagram of a traditional refrigeration plant where TGE is used for flow in one direction only.

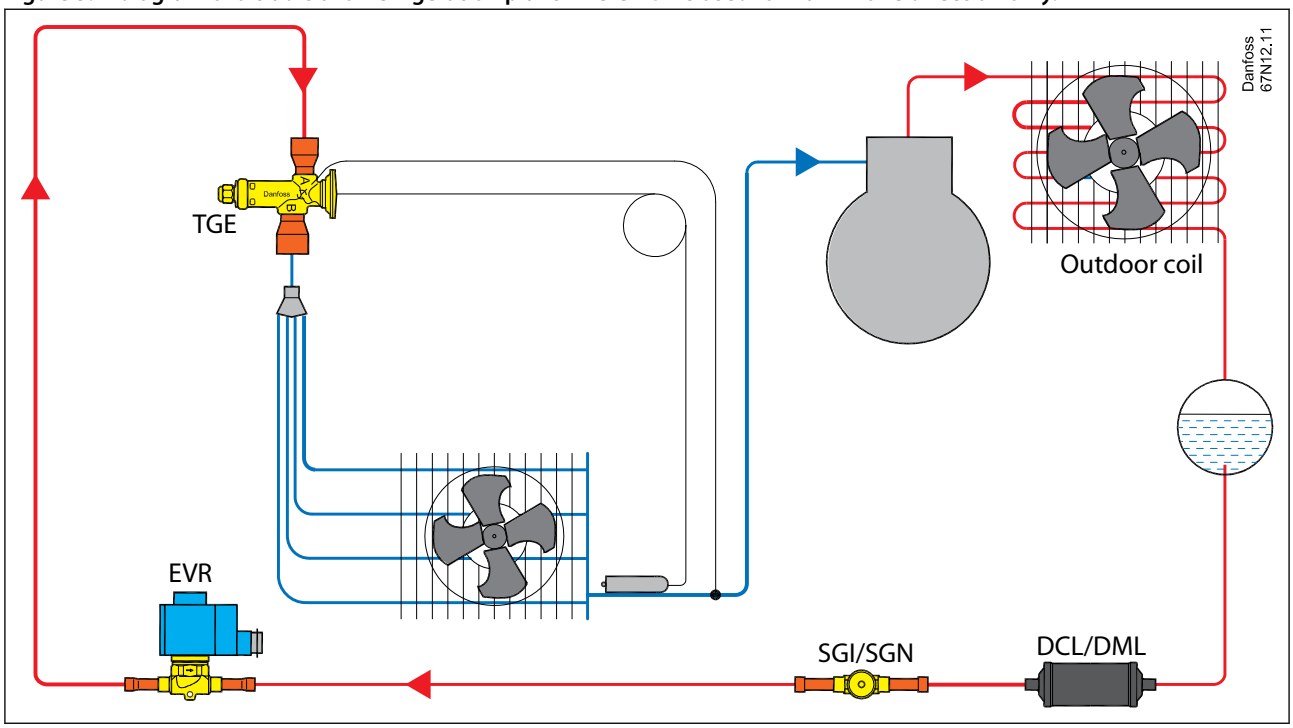

Figure 4: A conventional split heat pump system shown in cooling mode. This system has two TGE thermostatic expansion valves with fixed direction flow. An NRV check valve is placed in series with each TGE to allow liquid refrigerant to bypass when flow is opposite the TXV fixed direction

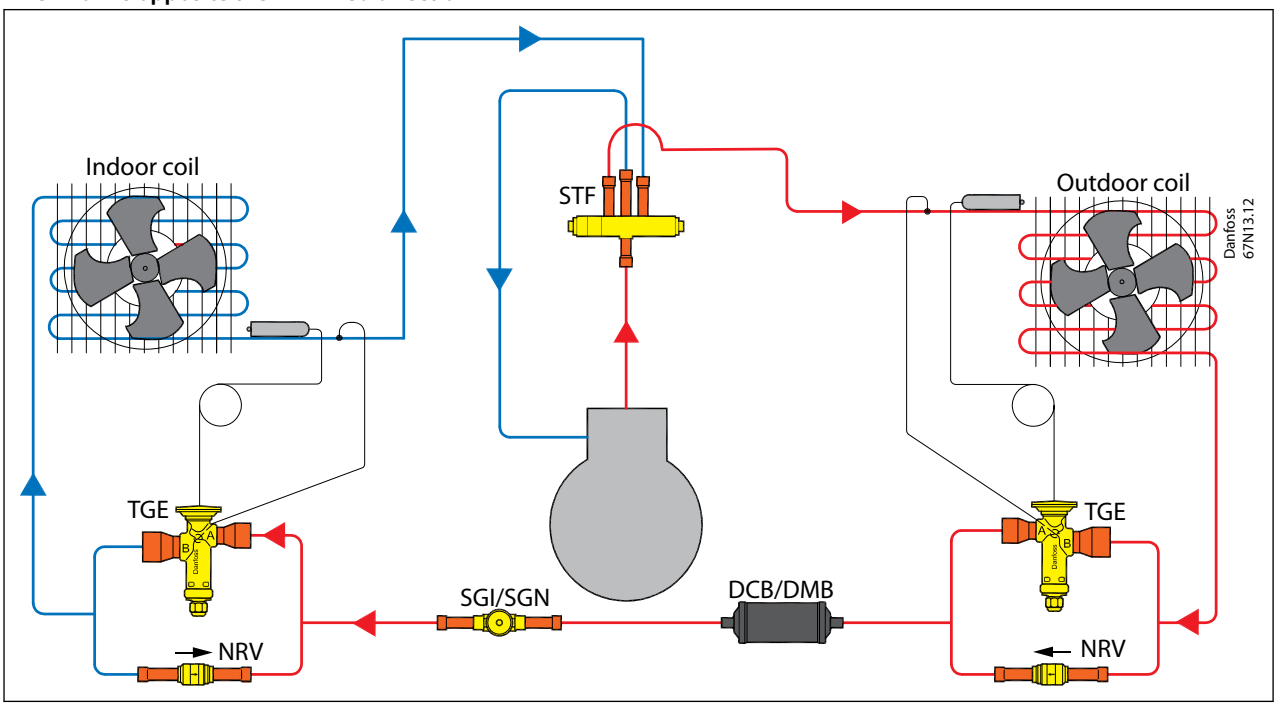

Figure 5: A heat pump system similar to that in fig. 4 but with a more compact design, where the distance between evaporator and condenser is very short. This system has only one bi–flow TGE valve metering liquid refrigerant effectively in both directions. Changeover is by means of a 4–way valve. A suction filter drier is often placed in suction lines just before the compressor. The normal flow direction of TGE is determined by the primary function, i.e. cooling or heating

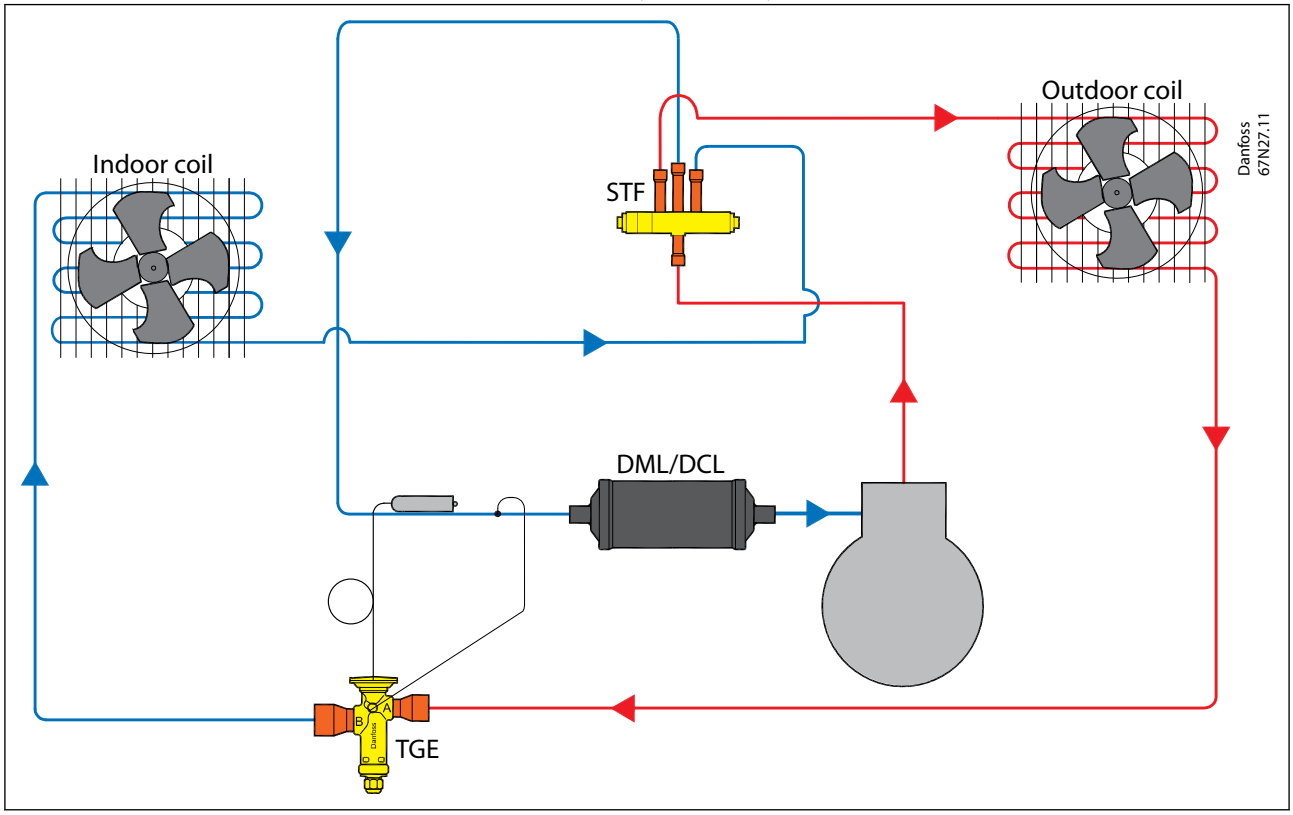

Product specification

Technical data

Max. temperature on thermostatic element:
MAH : 150 °C / 302 °F
K : 150 °C / 302 °F
N: 100 °C / 210 °F

Max. temperature on valve body: 110 °C / 230 °F

Max. working pressure: 49 bar / 711 psig.

Max. test pressure: 54 bar / 783 psig.

Table 1: Standard evaporating temperature ranges

Charge	Temperature range
MAH	-30 – 15 °C / -22 – 60 °F
N	-40 – 10 °C / -40 –50 °F without MOP
K	–25 – 10 °C, MOP 15 °C / –15 – 50 °F, MOP 60 °F

Table 2: Max. operating pressure

Refrigerant	Range K: –25 – 10 °C / –15 – 50 °F, MOP +15 °C / +60 °F
	MOP point in evaporating pressure pe
R410A	11.4 bar / 165 psig
R22	6.9 bar / 100 psig
R134a	3.8 bar / 55 psig
R407C	6.6 bar / 95 psig
R404A/ R507	8.3 bar / 120 psig

NOTE:
MOP for R32, R452B, R454B, R1234ze, R407F, R407A and R290, please contact Danfoss for more info.

Table 3: Connections

Type	Inlet solder ODF [inch]	Inlet solder ODF [mm]	Outlet solder ODF [inch]	Outlet solder ODF [mm]
TGE 10	3⁄8, 1⁄2, 5⁄8, 7⁄8	10, 12, 16, 22	5⁄8, 7⁄8, 1 1⁄8	16, 22, 28
TGE 20	5⁄8 , 7⁄8 , 1 1⁄8	16, 22, 28	5⁄8 , 7⁄8 , 1 1⁄8 , 1 3⁄8	16, 22, 28, 35
TGE 40	7⁄8 , 1 1⁄8	22, 28	7⁄8 , 1 1⁄8 , 1 3⁄8	22, 28, 35

Table 4: Capillary tube length

Type	Capillary tube length	
TGE 10 / TGE 20	1.5 m	59 inch
TGE 40	3 m	118 inch

Valve options

In addition to the standard programme, variants of following options may be available:
- Refrigerants
- Evaporating temperature range
- MOP point
- Static superheat setting (0K – 8K / 0 – 14.4 °F)
- Mechanical connections
- Bleed function (15% or 30%)

NOTE:
Please contact your nearest Danfoss sales office to discuss valve options.

Refrigerants

Refrigerants: R410A, R32, R452B, R454B, R22, R134a, R1234ze, R407F, R407A, R404A, R507, R407C and R290.

For other refrigerants, please contact Danfoss.

NOTE:
This product is approved for R290, R32, R452B, R454B by ignition source assessment in accordance to standard EN ISO80079-36 .

Capacity table

Table 5: Rated capacity[2])

Valve type	Orifice no.	Range N, K, MAH																					
		R410A		R32		R452B [4)]		R454B [4)]		R22		R134a		R1234ze		R407F		R407A		R404A / R507		R407C		R290	
		KW	TR	KW	TR	KW	TR	KW	TR	KW	TR	KW	TR	KW	TR	KW	TR	KW	TR	KW	TR	KW	TR	KW	TR
TGE 10	3	12	3.5	18	5	12	3.5	12	3.5	10	3	6	1.5	5	1.5	10	3	9	2.5	7	2	9	2.5	10	3
	4	16	4.5	24	7	16	4.5	18	5.0	14	4	8	2.5	7	2	14	4	12	3.5	9	2.5	13	3.5	14	4
	6	24	6.5	35	10	24	6.5	26	7.5	20	6	12	3.5	10	3	20	6	17	5	14	4	19	5	19	5
	8	32	9	47	13	32	9	35	10	27	7.5	17	4.5	14	4	27	7.5	23	6.5	18	5	25	7	25	7
	9	37	11	54	15	38	11	42	12	32	9	20	5.5	16	4.5	32	9	28	8	21	6	30	8.5	32	9
	11	45	13	68	19	46	13	49	14	38	11	24	7	20	5.5	40	11	34	10	26	7.5	36	10	36	10
	12.5	50	14	74	21	50	14	56	16	43	12	29	8	22	6	43	12	39	11	31	9	39	11	44	12
	16	60	17	87	25	60	17	67	19	50	14	35	9.5	27	7.5	50	14	46	13	35	10	49	14	50	14
TGE 20	12.5	54	15	81	23	55	15	56	16	43	12	29	8	22	6	46	13	39	11	31	9	42	12	44	12
	16	68	19	102	29	68	19	74	21	54	15	37	10	27	7.5	57	16	50	14	39	11	53	15	54	15
	20	79	23	120	34	81	23	88	25	63	18	44	12	31	8.5	67	19	59	17	45	13	62	18	63	18
	21[3)]	91	26	135	38	98	28	102	29	75	21	51	15	39	11	82	23	72	21	53	15	77	22	75	21
TGE 40	26	110	31	165	47	117	33	120	34	92	26	61	17	49	14	95	27	80	23	64	18	84	24	92	26
	30	125	35	187	53	134	38	137	39	104	30	70	20	57	16	108	31	91	26	72	21	95	27	106	30
	40	161	46	236	67	172	49	179	51	134	38	87	25	72	20	138	39	116	33	92	26	121	34	133	38
	42	182	52	273	78	208	59	208	59	148	42	102	29	81	23	165	47	140	40	105	30	148	42	152	43

[2]) The rated capacity is based on:

Evaporating temperature t_e : 4.4 °C / 40 °F

Condensing temperature t_c : 38 °C / 100 °F

Refrigerant temperature ahead of valve t_l : 37 °C / 98 °F

[3]) Contact Danfoss for more information

[4]) New sales code numbers are on request.

Valve selection based on capacity calculation

As for extended capacity calculations and valve selection based on capacities and refrigerants, please refer to Coolselector®2. Rated and extended capacities are calculated with the Coolselector®2 calculation engine to ARI standards with the ASEREP equations based on laboratory measurements of selected valves.

Dimensions and weights

Figure 6: Type TGE 10, TGE 20 and TGE 40

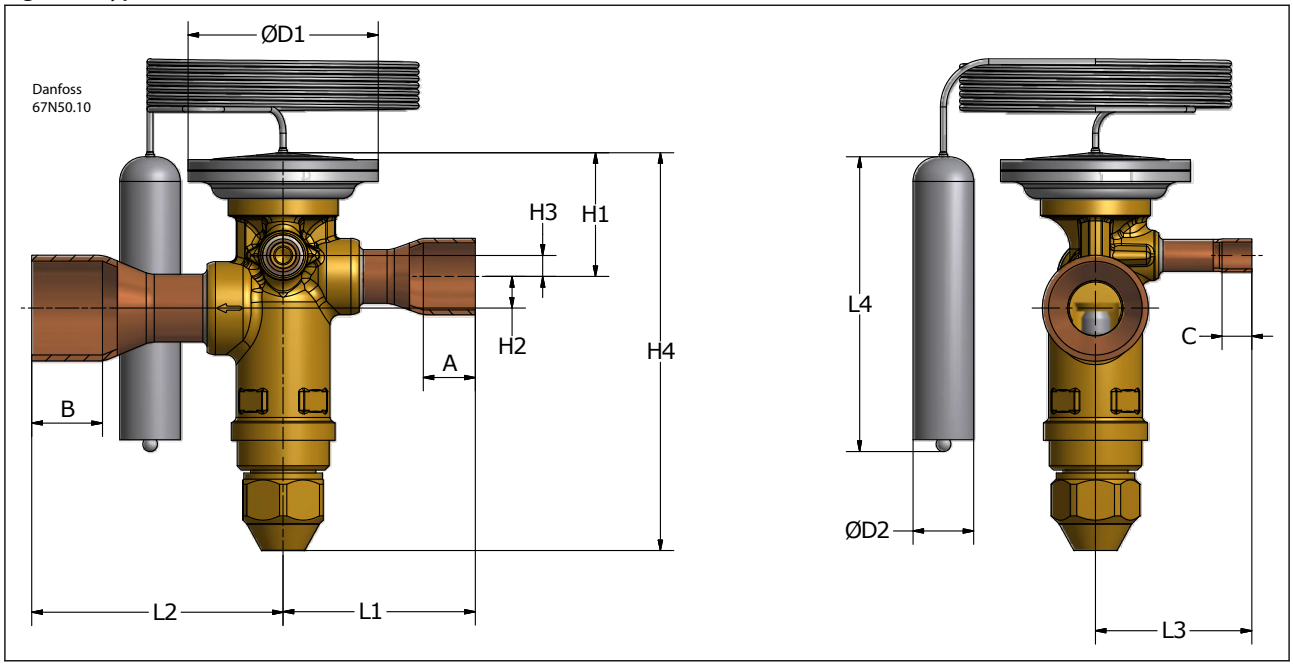

Table 6: Dimensions and weight in SI units

Type	Connections. ODF solder inlet x outlet x equalization		Capillary tube length	H1	H2	H3	H4	L1	L2	L3	L4	ØD1	ØD2	A	B	C	Weight
	[in.]	[mm]	[mm]	[mm]	[mm]	[mm]	[mm]	[mm]	[mm]	[mm]	[mm]	[mm]	[mm]	[mm]	[mm]	[mm]	[kg]
TGE 10	3/8 x 5/8 x 1/4	10 x 16 x 6	1.5	28.5	7.5	5.0	95.0	41.5	45.5	37.0	70	45	14.35	9.0	12	7	0.37
	1/2 x 5/8 x 1/4	12 x 16 x 6	1.5	28.5	7.5	5.0	95.0	41.5	45.5	37.0	70	45	14.35	10	12	7	0.37
	1/2 x 7/8 x 1/4	12 x 22 x 6	1.5	28.5	7.5	5.0	95.0	41.5	59.5	37.0	70	45	14.35	10	17	7	0.37
	5/8 x 5/8 x 1/4	16 x 16 x 6	1.5	28.5	7.5	5.0	95.0	45.5	45.5	37.0	70	45	14.35	12	12	7	0.37
	5/8 x 7/8 x 1/4	16 x 22 x 6	1.5	28.5	7.5	5.0	95.0	45.5	59.5	37.0	70	45	14.35	12	17	7	0.37
	5/8 x 1 1/8 x 1/4	16 x 28 x 6	1.5	28.5	7.5	5.0	95.0	45.5	59.5	37.0	70	45	14.35	12	20	7	0.37
	7/8 x 7/8 x 1/4	22 x 22 x 6	1.5	28.5	7.5	5.0	95.0	45.5	59.5	37.0	70	45	14.35	12	17	7	0.37
	7/8 x 1 1/8 x 1/4	22 x 28 x 6	1.5	28.5	7.5	5.0	95.0	45.5	59.5	37.0	70	45	14.35	12	20	7	0.37
TGE 20	5/8 x 5/8 x 1/4	16 x 16 x 6	1.5	32.0	9.0	8.0	121	48.0	62.0	40.5	78	53	19.20	12	12	7	0.57
	5/8 x 7/8 x 1/4	16 x 22 x 6	1.5	32.0	9.0	8.0	121	48.0	62.0	40.5	78	53	19.20	12	17	7	0.57
	5/8 x 1 1/8 x 1/4	16 x 28 x 6	1.5	32.0	9.0	8.0	121	48.0	66.0	40.5	78	53	19.20	12	20	7	0.57
	7/8 x 7/8 x 1/4	22 x 22 x 6	1.5	32.0	9.0	8.0	121	62.0	62.0	40.5	78	53	19.20	17	17	7	0.57
	7/8 x 1 1/8 x 1/4	22 x 28 x 6	1.5	32.0	9.0	8.0	121	62.0	66.0	40.5	78	53	19.20	17	20	7	0.57
	7/8 x 1 3/8 x 1/4	22 x 35 x 6	1.5	32.0	9.0	8.0	121	62.0	66.0	40.5	78	53	19.20	17	24	7	0.57
	1 1/8 x 1 1/8 x 1/4	28 x 28 x 6	1.5	32.0	9.0	8.0	121	62.0	66.0	40.5	78	53	19.20	20	20	7	0.57
	1 1/8 x 1 3/8 x 1/4	28 x 35 x 6	1.5	32.0	9.0	8.0	121	62.0	66.0	40.5	78	53	19.20	20	24	7	0.57
TGE 40	7/8 x 7/8x 1/4	22 x 22 x 6	3	39.0	15	11	148	65.5	69.5	43.5	78	60	19.20	17	20	7	0.93
	7/8 x 1 1/8 x 1/4	22 x 28 x 6	3	39.0	15	11	148	65.5	69.5	43.5	78	60	19.20	17	20	7	0.93
	7/8 x 1 3/8 x 1/4	22 x 35 x 6	3	39.0	15	11	148	65.5	74.5	43.5	78	60	19.20	17	25	7	0.93
	1 1/8 x 1 1/8 x 1/4	28 x 28 x 6	3	39.0	15	11	148	69.5	69.5	43.5	78	60	19.20	20	20	7	0.93
	1 1/8 x 1 3/8x 1/4	28 x 35 x 6	3	39.0	15	11	148	69.5	74.5	43.5	78	60	19.20	20	25	7	0.93

Figure 7: Type TGE 10, TGE 20 and TGE 40

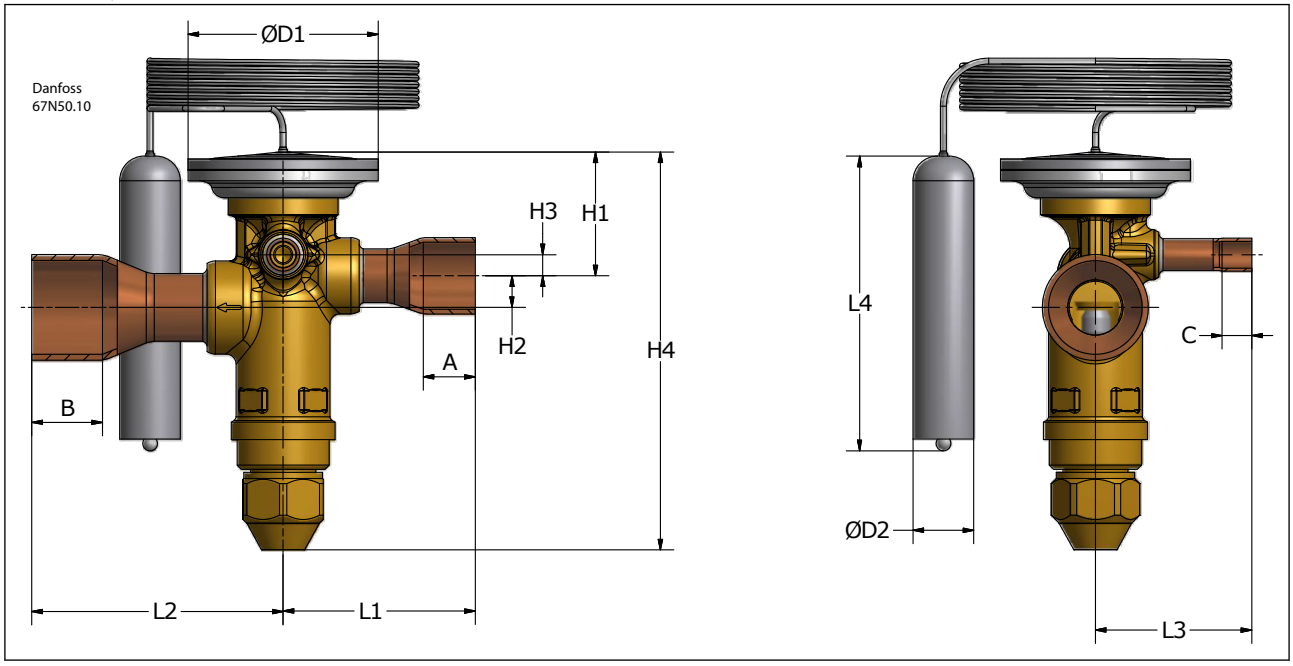

Table 7: Dimensions and weight in US units

Type	Connections. ODF solder inlet x outlet x equalization		Capillary tube length	H1	H2	H3	H4	L1	L2	L3	L4	ØD1	ØD2	A	B	C	Weigh
	[in.]	[mm]	[in.]	[in.]	[in.]	[in.]	[in.]	[in.]	[in.]	[in.]	[in.]	[in.]	[in.]	[in.]	[in.]	[in.]	[lbs]
TGE 10	3/8 x 5/8 x 1/4	10 x 16 x 6	59	1.12	0.30	0.20	3.74	1.63	1.79	1.46	2.76	1.77	0.56	0.36	0.48	0.28	0.81
	1/2 x 5/8 x 1/4	12 x 16 x 6	59	1.12	0.30	0.20	3.74	1.63	1.79	1.46	2.76	1.77	0.56	0.39	0.48	0.28	0.81
	1/2 x 7/8 x 1/4	12 x 22 x 6	59	1.12	0.30	0.20	3.74	1.63	2.34	1.46	2.76	1.77	0.56	0.39	0.66	0.28	0.81
	5/8 x 5/8 x 1/4	16 x 16 x 6	59	1.12	0.30	0.20	3.74	1.79	1.79	1.46	2.76	1.77	0.56	0.48	0.48	0.28	0.81
	5/8 x 7/8 x 1/4	16 x 22 x 6	59	1.12	0.30	0.20	3.74	1.79	2.34	1.46	2.76	1.77	0.56	0.48	0.66	0.28	0.81
	5/8 x 1 1/8 x 1/4	16 x 28 x 6	59	1.12	0.30	0.20	3.74	1.79	2.34	1.46	2.76	1.77	0.56	0.48	0.78	0.28	0.81
	7/8 x 7/8 x 1/4	22 x 22 x 6	59	1.12	0.30	0.20	3.74	1.79	2.34	1.46	2.76	1.77	0.56	0.48	0.66	0.28	0.81
	7/8 x 1 1/8 x 1/4	22 x 28 x 6	59	1.12	0.30	0.20	3.74	1.79	2.34	1.46	2.76	1.77	0.56	0.48	0.78	0.28	0.81
TGE 20	5/8 x 5/8 x 1/4	16 x 16 x 6	59	1.26	0.35	0.31	4.76	1.89	2.44	1.59	3.07	2.09	0.76	0.48	0.48	0.28	1.27
	5/8 x 7/8 x 1/4	16 x 22 x 6	59	1.26	0.35	0.31	4.76	1.89	2.44	1.59	3.07	2.09	0.76	0.48	0.66	0.28	1.27
	5/8 x 1 1/8 x 1/4	16 x 28 x 6	59	1.26	0.35	0.31	4.76	1.89	2.6	1.59	3.07	2.09	0.76	0.48	0.78	0.28	1.27
	7/8 x 7/8 x 1/4	22 x 22 x 6	59	1.26	0.35	0.31	4.76	2.44	2.44	1.59	3.07	2.09	0.76	0.66	0.66	0.28	1.27
	7/8 x 1 1/8 x 1/4	22 x 28 x 6	59	1.26	0.35	0.31	4.76	2.44	2.6	1.59	3.07	2.09	0.76	0.66	0.78	0.28	1.27
	7/8 x 1 3/8 x 1/4	22 x 35 x 6	59	1.26	0.35	0.31	4.76	2.44	2.6	1.59	3.07	2.09	0.76	0.66	0.98	0.28	1.27
	1 1/8 x 1 1/8 x 1/4	28 x 28 x 6	59	1.26	0.35	0.31	4.76	2.44	2.6	1.59	3.07	2.09	0.76	0.78	0.78	0.28	1.27
	1 1/8 x 1 3/8 x 1/4	28 x 35 x 6	59	1.26	0.35	0.31	4.76	2.44	2.6	1.59	3.07	2.09	0.76	0.78	0.98	0.28	1.27
TGE 40	7/8 x 7/8x 1/4	22 x 22 x 6	118	1.54	0.59	0.43	5.83	2.58	2.74	1.71	3.07	2.36	0.76	0.66	0.78	0.28	2.05
	7/8 x 1 1/8 x 1/4	22 x 28 x 6	118	1.54	0.59	0.43	5.83	2.58	2.74	1.71	3.07	2.36	0.76	0.66	0.78	0.28	2.05
	7/8 x 1 3/8 x 1/4	22 x 35 x 6	118	1.54	0.59	0.43	5.83	2.58	2.93	1.71	3.07	2.36	0.76	0.66	0.98	0.28	2.05
	1 1/8 x 1 1/8 x 1/4	28 x 28 x 6	118	1.54	0.59	0.43	5.83	2.74	2.74	1.71	3.07	2.36	0.76	0.78	0.78	0.28	2.05
	1 1/8 x 1 3/8x 1/4	28 x 35 x 6	118	1.54	0.59	0.43	5.83	2.74	2.93	1.71	3.07	2.36	0.76	0.78	0.98	0.28	2.05

Identification

Figure 8: Type TGE 10, TGE 20 and TGE 40

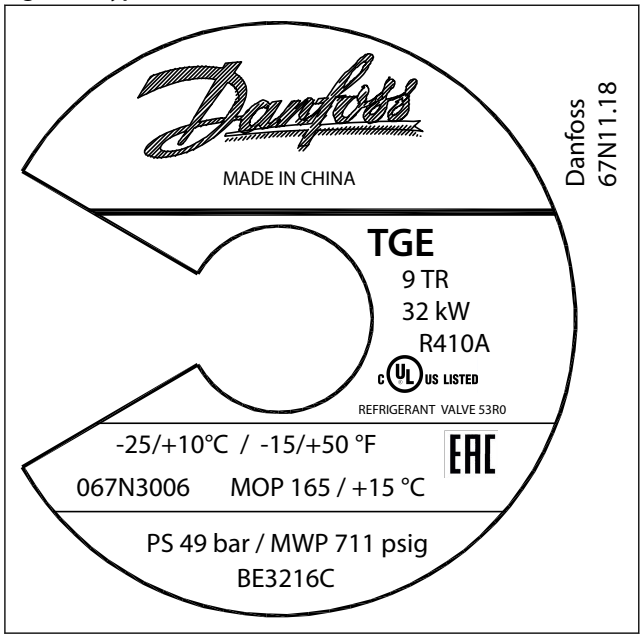

The valve is fitted with a product label (on top of the diaphragm) which holds information as follows:

TGE = Valve type

9 TR = Rated capacity Q in TR

32 kW = Rated capacity Q in kW

R410A = Refrigerant

–25 – 10 °C / –15 – 50 °F = Evaporating temperature range

067N3006 = Code number

MOP 165 = Max. operating pressure 165 psig

PS 49 bar / MWP 711 psig = Max. working pressure in bar and psig

BE3216C:

BE = China

32 = week

16 = 2016

C = wednesday

Ordering

Table 8: R410A/R32, Range N -40 – 10 °C / -40 –50 °F, OS = 4 K / 7.2 °F

Valve type	Orifice no.	Rated capacity R410A		Rated capacity R32		Connections solder ODF		Code no. Multi pack
		[KW]	[TR]	[KW]	[TR]	Inlet x Outlet [inch]	Pressure equalization [inch]	
TGE 10	3	12	3.5	18	5	3/8 x 5/8	1/4	067N3150
TGE 10	3	12	3.5	18	5	1/2 x 5/8	1/4	067N3151
TGE 10	4	16	4.5	24	7	1/2 x 7/8	1/4	067N3152
TGE 10	6	24	6.5	35	10	1/2 x 5/8	1/4	067N3153
TGE 10	6	24	6.5	35	10	1/2 x 7/8	1/4	067N3154
TGE 10	6	24	6.5	35	10	5/8 x 7/8	1/4	067N3155
TGE 10	8	32	9	47	13	1/2 x 5/8	1/4	067N3293
TGE 10	8	32	9	47	13	5/8 x 7/8	1/4	067N3156
TGE 10	9	37	11	54	15	5/8 x 7/8	1/4	067N3296
TGE 10	11	45	13	68	19	5/8 x 7/8	1/4	067N3157
TGE 10	12.5	50	14	74	21	5/8 x 7/8	1/4	067N3410
TGE 20	12.5	54	15	81	23	5/8 x 7/8	1/4	067N3159
TGE 40	26	110	31	165	47	1 1/8 x 1 1/8	1/4	067N3234

The rated capacity is based on:
Evaporating temperature t_e : 4.4 °C / 40 °F
Condensing temperature t_c : 38 °C / 100 °F
Refrigerant temperature ahead of valve t_l : 37 °C / 98 °F

Table 9: R410A, Range N -40 – 10 °C / -40 –50 °F, OS = 4 K / 7.2 °F

Valve type	Orifice no.	Rated capacity		Connections solder ODF		Code no. Multi pack
		[KW]	[TR]	Inlet x Outlet [inch]	Pressure equalization [inch]	
TGE 10	11	45	13	5/8 x 1 1/8	1/4	067N3158
TGE 10	16	60	17	7/8 x 1 1/8	1/4	067N3411
TGE 20	12.5	54	15	5/8 x 1 1/8	1/4	067N3160
TGE 20	12.5	54	15	7/8 x 7/8	1/4	067N3231
TGE 20	12.5	54	15	7/8 x 1 1/8	1/4	067N3232
TGE 20	16	68	19	5/8 x 1 1/8	1/4	067N3161
TGE 20	16	68	19	7/8 x 1 1/8	1/4	067N3162
TGE 20	20	79	23	7/8 x 1 1/8	1/4	067N3163
TGE 20	20	79	23	7/8 x 1 3/8	1/4	067N3164
TGE 20	21	91	26	7/8 x 1 1/8	1/4	067N3272
TGE 40	26	110	31	7/8 x 1 3/8	1/4	067N3165
TGE 40	26	110	31	1 1/8 x 1 3/8	1/4	067N3166
TGE 40	30	125	35	1 1/8 x 1 3/8	1/4	067N3168
TGE 40	40	161	46	1 1/8 x 1 3/8	1/4	067N3169
TGE 40	42	182	52	1 1/8 x 1 3/8	1/4	067N3400

The rated capacity is based on:
Evaporating temperature t_e : 4.4 °C / 40 °F
Condensing temperature t_c : 38 °C / 100 °F
Refrigerant temperature ahead of valve t_l : 37 °C / 98 °F

Table 10: R410A, Range K -25 – 10 °C /-15 – 50 °F with MOP 15 °C / 60 °F, OS = 4 K / 7.2 °F

Valve type	Orifice no.	Rated capacity		Connections solder ODF		Code no. Multi pack
		[KW]	[TR]	Inlet x Outlet [inch]	Pressure equalization [inch]	
TGE 10	3	12	3.5	3/8 x 5/8	1/4	067N3000
TGE 10	3	12	3.5	1/2 x 5/8	1/4	067N3001
TGE 10	4	16	4.5	1/2 x 7/8	1/4	067N3002
TGE 10	6	24	6.5	1/2 x 5/8	1/4	067N3003
TGE 10	6	24	6.5	5/8 x 7/8	1/4	067N3005

Valve type	Orifice no.	Rated capacity		Connections solder ODF		Code no. Multi pack
		[KW]	[TR]	Inlet x Outlet [inch]	Pressure equalization [inch]	
TGE 10	8	32	9	5/8 x 7/8	1/4	067N3006
TGE 10	9	37	11	5/8 x 7/8	1/4	067N3340
TGE 10	11	45	13	5/8 x 7/8	1/4	067N3007
TGE 10	11	45	13	5/8 x 1 1/8	1/4	067N3008
TGE 10	12.5	50	14	5/8 x 1 1/8	1/4	067N3402
TGE 10	16	60	17	5/8 x 1 1/8	1/4	067N3401
TGE 20	12.5	54	15	5/8 x 7/8	1/4	067N3009
TGE 20	12.5	54	15	5/8 x 1 1/8	1/4	067N3010
TGE 20	16	68	19	5/8 x 1 1/8	1/4	067N3011
TGE 20	16	68	19	7/8 x 1 1/8	1/4	067N3012
TGE 20	20	79	23	7/8 x 1 1/8	1/4	067N3013
TGE 40	26	110	31	7/8 x 1 1/8	1/4	067N3135
TGE 40	26	110	31	7/8 x 1 3/8	1/4	067N3015
TGE 40	30	125	35	1 1/8 x 1 3/8	1/4	067N3018
TGE 40	40	161	46	1 1/8 x 1 3/8	1/4	067N3019
TGE 40	42	182	52	1 1/8 x 1 3/8	1/4	067N3341

The rated capacity is based on:
Evaporating temperature t_e : 4.4 °C / 40 °F
Condensing temperature t_c : 38 °C / 100 °F
Refrigerant temperature ahead of valve t_l : 37 °C / 98 °F

Table 11: R410A, Range MAH -30 – 15 °C / -22 – 60 °F with anti hunting charge, OS = 4 K / 7.2 °F

Valve type	Orifice no.	Rated capacity		Connections solder ODF		Code no. Multi pack
		[KW]	[TR]	Inlet x Outlet [inch]	Pressure equalization [inch]	
TGE 10	3	12	3.5	1/2 x 5/8	1/4	067N9201
TGE 10	4	16	4.5	1/2 x 7/8	1/4	067N9202
TGE 10	6	24	6.5	1/2 x 5/8	1/4	067N9203
TGE 10	6	24	6.5	5/8 x 7/8	1/4	067N9200
TGE 10	8	32	9	5/8 x 7/8	1/4	067N9206
TGE 10	9	37	11	5/8 x 7/8	1/4	067N9287
TGE 10	11	45	13	5/8 x 7/8	1/4	067N9207
TGE 10	12.5	50	14	5/8 x 7/8	1/4	067N9509
TGE 10	16	60	17	7/8 x 1 1/8	1/4	067N9512
TGE 20	12.5	54	15	5/8 x 7/8	1/4	067N9209
TGE 20	12.5	54	15	5/8 x 1 1/8	1/4	067N9210
TGE 20	16	68	19	7/8 x 1 1/8	1/4	067N9212
TGE 20	20	79	23	7/8 x 1 1/8	1/4	067N9213
TGE 20	21	91	26	7/8 x 1 3/8	1/4	067N9088
TGE 40	26	110	31	7/8 x 1 3/8	1/4	067N9215
TGE 40	26	110	31	1 1/8 x 1 3/8	1/4	067N9216
TGE 40	30	125	35	1/8 x 1 3/8	1/4	067N9218
TGE 40	40	161	46	1/8 x 1 3/8	1/4	067N9219
TGE 40	42	182	52	1/8 x 1 3/8	1/4	067N9289

The rated capacity is based on:
Evaporating temperature t_e : 4.4 °C / 40 °F
Condensing temperature t_c : 38 °C / 100 °F
Refrigerant temperature ahead of valve t_l : 37 °C / 98 °F

Table 12: R22/R407C [1]), Range N -40 – 10 °C / -40 –50 °F, OS = 4 K / 7.2 °F"

Valve type	Orifice no.	Rated capacity		Connections solder ODF Inlet x Outlet		Pressure equalization		Code no. Multi pack
		[KW]	[TR]	[inch]	[mm]	[inch]	[mm]	
TGE 10	3	10	3	3/8 x 5/8	–	1/4	–	067N2150
TGE 10	3	10	3	1/2 x 5/8	–	1/4	–	067N2151
TGE 10	4	14	4	1/2 x 7/8	–	1/4	–	067N2152
TGE 10	6	20	6	1/2 x 5/8	–	1/4	–	067N2153
TGE 10	6	20	6	1/2 x 7/8	–	1/4	–	067N2154
TGE 10	6	20	6	–	12 × 22	–	6	067N2194
TGE 10	6	20	6	–	16 × 16	–	6	067N2263
TGE 10	6	20	6	5/8 x 7/8	–	1/4	–	067N2155
TGE 10	8	27	7.5	5/8 x 7/8	–	1/4	–	067N2156
TGE 10	8	27	7.5	–	16 × 22	–	6	067N2196
TGE 10	9	32	9	5/8 x 7/8	–	1/4	–	067N2460
TGE 10	9	32	9	–	16 x 22	–	6	067N2281
TGE 10	11	38	11	5/8 x 7/8	–	1/4	–	067N2157
TGE 10	11	38	11	–	16 × 22	–	6	067N2197
TGE 10	11	38	11	5/8 x 1 1/8	–	1/4	–	067N2158
TGE 10	11	38	11	–	16 × 28	–	6	067N2198
TGE 10	12.5	43	12	5/8 x 7/8	–	1/4	–	067N2720
TGE 10	16	50	14	5/8 x 1 1/8	–	1/4	–	067N2721
TGE 10	16	50	14	7/8 x 1 1/8	–	1/4	–	067N2722
TGE 20	12.5	43	12	5/8 x 7/8	–	1/4	–	067N2159
TGE 20	12.5	43	12	5/8 x 1 1/8	–	1/4	–	067N2160
TGE 20	12.5	43	12	–	16 × 28	–	6	067N2200
TGE 20	16	54	15	5/8 x 7/8	–	1/4	–	067N2255
TGE 20	16	54	15	5/8 x 1 1/8	–	1/4	–	067N2161
TGE 20	16	54	15	7/8 x 1 1/8	–	1/4	–	067N2162
TGE 20	20	63	18	7/8 x 1 1/8	–	1/4	–	067N2163
TGE 20	20	63	18	7/8 x 1 3/8	–	1/4	–	067N2164
TGE 40	26	92	26	7/8 x 1 1/8	–	1/4	–	067N2251
TGE 40	26	92	26	7/8 x 1 3/8	–	1/4	–	067N2165
TGE 40	30	104	30	7/8 x 1 3/8	–	1/4	–	067N2167
TGE 40	30	104	30	1 1/8 x 1 3/8	–	1/4	–	067N2168
TGE 40	40	134	38	1 1/8 x 1 3/8	–	1/4	–	067N2169
TGE 40	42	148	42	1 1/8 x 1 3/8	–	1/4	–	067N2283

The rated capacity is based on:
Evaporating temperature t_e : 4.4 °C / 40 °F
Condensing temperature t_c : 38 °C / 100 °F
Refrigerant temperature ahead of valve t_l : 37 °C / 98 °F
[1]) For R407C plants, please select valves from the dedicated R407C program.

Table 13: R22/R407C [1]), Range K –25 – 10 °C / –15 – 50 °F with MOP 15 °C / 60 °F, OS = 4 K / 7.2 °F

Valve type	Orifice no.	Rated capacity		Connections solder ODF		Code no. Multi pack
		[KW]	[TR]	Inlet x Outlet [inch]	Pressure equalization [inch]	
TGE 10	3	10	3	3/8 x 5/8	1/4	067N2000
TGE 10	3	10	3	1/2 x 5/8	1/4	067N2001
TGE 10	4	14	4	1/2 x 7/8	1/4	067N2002
TGE 10	6	20	6	1/2 x 5/8	1/4	067N2003
TGE 10	6	20	6	5/8 x 7/8	1/4	067N2005
TGE 10	8	27	7.5	5/8 x 7/8	1/4	067N2006
TGE 10	9	32	9	5/8 x 7/8	1/4	067N2415
TGE 10	11	38	11	5/8 x 7/8	1/4	067N2007
TGE 10	11	38	11	5/8 x 1 1/8	1/4	067N2008
TGE 10	12.5	43	12	5/8 x 7/8	1/4	067N2700
TGE 10	16	50	14	7/8 x 1 1/8	1/4	067N2701

Valve type	Orifice no.	Rated capacity		Connections solder ODF		Code no. Multi pack
		[KW]	[TR]	Inlet x Outlet [inch]	Pressure equalization [inch]	
TGE 20	12.5	43	12	5/8 x 7/8	1/4	067N2009
TGE 20	12.5	43	12	5/8 x 1 1/8	1/4	067N2010
TGE 20	16	54	15	5/8 x 1 1/8	1/4	067N2011
TGE 20	16	54	15	7/8 x 1 1/8	1/4	067N2012
TGE 20	20	63	18	7/8 x 1 1/8	1/4	067N2013
TGE 20	20	63	18	7/8 x 1 3/8	1/4	067N2014
TGE 40	26	92	26	7/8 x 1 3/8	1/4	067N2015
TGE 40	26	92	26	1 1/8 x 1 3/8	1/4	067N2016
TGE 40	30	104	30	7/8 x 1 3/8	1/4	067N2017
TGE 40	30	104	30	1 1/8 x 1 3/8	1/4	067N2018
TGE 40	40	134	38	1 1/8 x 1 3/8	1/4	067N2019

The rated capacity is based on:
Evaporating temperature t_e : 4.4 °C / 40 °F
Condensing temperature t_c : 38 °C / 100 °F
Refrigerant temperature ahead of valve t_l 37 °C / 98 °F
[1]) For R407C plants, please select valves from the dedicated R407C program.

Table 14: R22/R407C [1]), Range MAH -30 – 15 °C / -22 – 60 °F with anti hunting charge, OS = 4 K / 7.2 °F

Valve type	Orifice no.	Rated capacity		Connections solder ODF		Code no. Multi pack
		[KW]	[TR]	Inlet x Outlet [inch]	Pressure equalization [inch]	
TGE 10	6	20	6	1/2 x 7/8	1/4	067N9404
TGE 10	8	27	7.5	5/8 x 7/8	1/4	067N9406
TGE 10	11	38	11	5/8 x 7/8	1/4	067N9407
TGE 20	12.5	43	12	5/8 x 7/8	1/4	067N9409
TGE 20	16	54	15	7/8 x 1 1/8	1/4	067N9412
TGE 20	20	63	18	7/8 x 1 1/8	1/4	067N9413
TGE 40	26	92	26	7/8 x 1 3/8	1/4	067N9415
TGE 40	30	104	30	1 1/8 x 1 3/8	1/4	067N9418
TGE 40	40	134	38	1 1/8 x 1 3/8	1/4	067N9419

The rated capacity is based on:
Evaporating temperature t_e : 4.4 °C / 40 °F
Condensing temperature t_c : 38 °C / 100 °F
Refrigerant temperature ahead of valve t_l 37 °C / 98 °F
[1]) For R407C plants, please select valves from the dedicated R407C program.

Table 15: R134a, Range N -40 – 10 °C / -40 –50 °F, OS = 4 K / 7.2 °F

Valve type	Orifice no.	Rated capacity		Connections solder ODF				Code no. Multi pack
		[KW]	[TR]	Inlet x Outlet		Pressure equalization		
				[inch]	[mm]	[inch]	[mm]	
TGE 10	3	6	1.5	3/8 x 5/8	–	1/4	–	067N5150
TGE 10	3	6	1.5	–	12 × 16	–	6	067N5191
TGE 10	4	8	2.5	1/2 x 7/8	–	1/4	–	067N5152
TGE 10	4	8	2.5	–	12 × 22	–	6	067N5192
TGE 10	6	12	3.5	1/2 x 5/8	–	1/4	–	067N5153
TGE 10	6	12	3.5	1/2 x 7/8	–	1/4	–	067N5154
TGE 10	6	12	3.5	–	16 × 22	–	6	067N5195
TGE 10	8	17	4.5	5/8 x 7/8	–	1/4	–	067N5156
TGE 10	8	17	4.5	–	16 × 22	–	6	067N5196
TGE 10	9	20	5.5	5/8 x 7/8	–	1/4	–	067N5260
TGE 10	11	24	7	5/8 x 7/8	–	1/4	–	067N5157
TGE 10	12.5	29	8	5/8 x 7/8	–	1/4	–	067N5720
TGE 10	16	35	9.5	7/8 x 1 1/8	–	1/4	–	067N5721
TGE 20	12.5	29	8	5/8 x 7/8	–	1/4	–	067N5159
TGE 20	16	37	10	5/8 x 1 1/8	–	1/4	–	067N5161

Valve type	Orifice no.	Rated capacity		Connections solder ODF				Code no. Multi pack
		[KW]	[TR]	Inlet x Outlet		Pressure equalization		
				[inch]	[mm]	[inch]	[mm]	
TGE 20	16	37	10	7/8 x 1 1/8	–	1/4	–	067N5162
TGE 20	20	44	12	7/8 x 1 1/8	–	1/4	–	067N5163
TGE 40	26	61	17	7/8 x 1 3/8	–	1/4	–	067N5165
TGE 40	26	61	17	1 1/8 x 1 3/8	–	1/4	–	067N5166
TGE 40	30	70	20	7/8 x 1 3/8	–	1/4	–	067N5167
TGE 40	30	70	20	1 1/8 x 1 3/8	–	1/4	–	067N5168
TGE 40	40	87	25	1 1/8 x 1 3/8	–	1/4	–	067N5169

The rated capacity is based on:
Evaporating temperature t_e : 4.4 °C / 40 °F
Condensing temperature t_c : 38 °C / 100 °F
Refrigerant temperature ahead of valve t_l 37 °C / 98 °F

Table 16: R134a, Range N -40 – 10 °C / -40 –50 °F, OS = 4 K / 7.2 °F

Valve type	Orifice no.	Rated capacity		Connections flare / MIO				Code no. Multi pack
				Inlet x Outlet [inch]		Pressure equalization [inch]		
		[KW]	[TR]	Flare	MIO	Flare	MIO	
TGE 10	3	6	1.5	–	1/2 x 5/8	–	1/4	067N7150
TGE 10	4	8	2.5	–	3/8 x 1/2	1/4	–	067N7153
TGE 10	4	8	2.5	3/8 x 1/2	–	1/4	–	067N7154
TGE 10	6	12	3.5	–	1/2 x 5/8	–	1/4	067N7171
TGE 10	6	12	3.5	1/2 x 5/8	–	1/4	–	067N7157
TGE 10	6	12	3.5	–	3/8 x 1/2	1/4	–	067N7158
TGE 10	6	12	3.5	3/8 x 1/2	–	1/4	–	067N7160
TGE 10	6	12	3.5	–	3/8 x 1/2	–	1/4	067N7177
TGE 10	8	17	4.5	–	3/8 × 1/2	–	1/4	067N7176
TGE 10	8	17	4.5	–	1/2 × 5/8	–	1/4	067N7161
TGE 10	8	17	4.5	1/2 × 5/8	–	1/4	–	067N7163
TGE 10	8	17	4.5	–	3/8 x 1/2	1/4	–	067N7164
TGE 10	8	17	4.5	–	5/8 x 3/4	–	1/4	067N7165
TGE 10	9	20	5.5	–	5/8 x 3/4	–	1/4	067N7181
TGE 10	11	24	7	–	5/8 x 3/4	–	1/4	067N7166
TGE 10	12.5	29	8	–	5/8 x 3/4	–	1/4	067N7200
TGE 10	16	35	9.5	–	5/8 x 3/4	–	1/4	067N7201
TGE 10	16	35	9.5	5/8 x 3/4	–	1/4	–	067N7203
TGE 20	12.5	29	8	–	5/8 x 3/4	–	1/4	067N7167
TGE 20	16	37	10	–	5/8 x 3/4	–	1/4	067N7169
TGE 20	16	37	10	5/8 x3/4	–	1/4	–	067N7168
TGE 20	20	44	12	–	5/8 x 3/4	–	1/4	067N7174

The rated capacity is based on:
Evaporating temperature t_e : 4.4 °C / 40 °F
Condensing temperature t_c : 38 °C / 100 °F
Refrigerant temperature ahead of valve t_l : 37 °C / 98 °F

Table 17: R134a, Range K -25 – 10 °C /-15 – 50 °F with MOP 15 °C / 60 °F, OS = 4 K / 7.2 °F

Valve type	Orifice no.	Rated capacity		Connections solder ODF				Code no. Multi pack
		[KW]	[TR]	Inlet x Outlet		Pressure equalization		
				[inch]	[mm]	[inch]	[mm]	
TGE 10	3	6	1.5	3/8 x 5/8	–	1/4	–	067N5000
TGE 10	4	8	2.5	1/2 x 7/8	–	1/4	–	067N5002
TGE 10	6	12	3.5	1/2 x 5/8	–	1/4	–	067N5003
TGE 10	6	12	3.5	–	12 × 16	–	6	067N5043
TGE 10	6	12	3.5	5/8 x 7/8	–	1/4	–	067N5005
TGE 10	8	17	4.5	5/8 x 7/8	–	1/4	–	067N5006
TGE 10	11	24	7	5/8 x 7/8	–	1/4	–	067N5007

Valve type	Orifice no.	Rated capacity		Connections solder ODF				Code no. Multi pack
				Inlet x Outlet		Pressure equalization		
		[KW]	[TR]	[inch]	[mm]	[inch]	[mm]	
TGE 10	11	24	7	–	16 × 22	–	6	067N5047
TGE 10	11	24	7	5/8 x 1 1/8	–	1/4	–	067N5008
TGE 10	12.5	29	8	5/8 x 7/8	–	1/4	–	067N5700
TGE 20	12.5	29	8	5/8 x 7/8	–	1/4	–	067N5009
TGE 20	16	37	10	5/8 x 1 1/8	–	1/4	–	067N5011
TGE 20	20	44	12	7/8 x 1 1/8	–	1/4	–	067N5013
TGE 40	26	61	17	7/8 x 1 3/8	–	1/4	–	067N5015
TGE 40	30	70	20	1 1/8 x 1 3/8	–	1/4	–	067N5018
TGE 40	40	87	25	1 1/8 x 1 3/8	–	1/4	–	067N5019

The rated capacity is based on:
Evaporating temperature t_e : 4.4 °C / 40 °F
Condensing temperature t_c : 38 °C / 100 °F
Refrigerant temperature ahead of valve t_l : 37 °C / 98 °F

Table 18: R134a, Range K –25 – 10 °C / –15 – 50 °F with MOP 15 °C / 60°F, OS = 4 K / 7.2 °F

Valve type	Orifice no.	Rated capacity		Connections flare / MIO				Code no. Multi pack
				Inlet x Outlet [inch]		Pressure equalization [inch]		
		[KW]	[TR]	Flare	MIO	Flare	MIO	
TGE 10	4	8	2.5	–	1/2 × 5/8	–	1/4	067N7002
TGE 10	6	12	3.5	3/8 x 1/2	–	1/4	–	067N7003
TGE 10	6	12	3.5	1/2 x 5/8	–	1/4	–	067N7004
TGE 10	8	17	4.5	–	1/2 × 5/8	–	1/4	067N7010
TGE 10	8	17	4.5	1/2 x 5/8	–	1/4	–	067N7008
TGE 10	8	17	4.5	–	5/8 x 3/4	–	1/4	067N7012
TGE 10	8	17	4.5	5/8 x 3/4	–	1/4	–	067N7013
TGE 10	9	20	5.5	–	5/8 x 3/4	–	1/4	067N7046
TGE 10	11	24	7	–	5/8 x 3/4	–	1/4	067N7015
TGE 10	11	24	7	5/8 x 3/4	–	1/4	–	067N7016
TGE 10	12.5	29	8	–	5/8 x 3/4	–	1/4	067N7210
TGE 10	12.5	29	8	5/8 x 3/4	–	1/4	–	067N7212
TGE 10	16	35	9.5	–	5/8 x 3/4	–	1/4	067N7211
TGE 20	12.5	29	8	–	5/8 x 3/4	–	1/4	067N7017
TGE 20	12.5	29	8	5/8 x 3/4	–	1/4	–	067N7018
TGE 20	16	37	10	–	5/8 x 3/4	–	1/4	067N7019
TGE 20	16	37	10	5/8 x 3/4	–	1/4	–	067N7020
TGE 20	20	44	12	5/8 x 3/4	–	1/4	–	067N7021

The rated capacity is based on:
Evaporating temperature t_e : 4.4 °C / 40 °F
Condensing temperature t_c : 38 °C / 100 °F
Refrigerant temperature ahead of valve t_l : 37 °C / 98 °F

Table 19: R1234ze, Range –30 – 10 °C/ –22 – 50 °F,OS = 4 K/7.2 °F

Valve type	Orifice no.	Rated capacity		Connections solder ODF		Code no. Multi pack
				Inlet x Outlet	Pressure equalization	
		[KW]	[TR]	[inch]	[inch]	
TGE 10	8	14	4	5/8 x 7/8	1/4	067N8001
TGE 10	11	20	5.5	5/8 x 7/8	1/4	067N8002
TGE 10	12.5	22	6	5/8 x 7/8	1/4	067N8003
TGE 20	20	31	8.5	7/8 x 1 1/8	1/4	067N8004
TGE 40	26	49	14	7/8 x 1 1/8	1/4	067N8005

The rated capacity is based on:
Evaporating temperature t_e : 4.4 °C / 40 °F

Condensing temperature t_c : 38 °C / 100 °F
Refrigerant temperature ahead of valve t_l : 37 °C / 98 °F

Table 20: R407F/R407A[1]), Range N -40 – 10 °C / -40 –50 °F, OS = 4 K / 7.2 °F

Valve type	Orifice no.	Rated capacity R407F		Rated capacity R407A		Connections solder ODF		Code no. Multi pack
		[KW]	[TR]	[KW]	[TR]	Inlet x Outlet	Pressure equalization	
						[inch]	[inch]	
TGE 10	4	14	4	12	3.5	½ x ⅞	¼	067N4700
TGE 10	6	20	6	17	5	⅝ x ⅞	¼	067N4701
TGE 10	8	27	7.5	23	6.5	⅝ x ⅞	¼	067N4702
TGE 10	9	32	9	28	8	⅝ x ⅞	¼	067N4703
TGE 10	11	40	11	34	10	⅝ x 1 ⅛	¼	067N4704

The rated capacity is based on:
Evaporating temperature t_e : 4.4 °C / 40 °F
Condensing temperature t_c : 38 °C / 100 °F
Refrigerant temperature ahead of valve t_l : 37 °C / 98 °F
[1]) On systems charged with R407F, SS = 4.0 °C / 7.2 °F, on systems charged with R407A, SS = 2.7 °C / 4.9 °F.

Table 21: R404A/R507, Range N -40 – 10 °C / -40 –50 °F, OS = 4 K / 7.2 °F

Valve type	Orifice no.	Rated capacity		Connections solder ODF		Code no. Multi pack
		[KW]	[TR]	Inlet x Outlet [inch]	Pressure equalization [inch]	
TGE 10	3	7	2	⅜ x ⅝	¼	067N6170
TGE 10	4	9	2.5	½ x ⅞	¼	067N6172
TGE 10	6	14	4	½ x ⅝	¼	067N6173
TGE 10	6	14	4	½ x ⅞	¼	067N6151
TGE 10	8	18	5	½ x ⅝	¼	067N6175
TGE 10	8	18	5	⅝ x ⅞	¼	067N6150
TGE 10	9	21	6	⅝ x ⅞	¼	067N6167
TGE 10	11	26	7.5	⅝ x ⅞	¼	067N6154
TGE 10	12.5	31	9	⅝ x ⅞	¼	067N6300
TGE 10	16	35	10	⅝ x 1 ⅛	¼	067N6301
TGE 20	12.5	31	9	⅝ x ⅞	¼	067N6158
TGE 20	16	39	11	⅝ x 1 ⅛	¼	067N6155
TGE 20	16	39	11	1 ⅛ x 1 ⅜	¼	067N6188
TGE 20	16	39	11	⅞ x 1 ⅛	¼	067N6181
TGE 20	20	45	13	⅞ x 1 ⅛	¼	067N6162
TGE 40	26	64	18	⅞ x 1 ⅜	¼	067N6161
TGE 40	30	72	21	1 ⅛ x 1 ⅜	¼	067N6186
TGE 40	40	92	26	1 ⅛ x 1 ⅜	¼	067N6187

The rated capacity is based on:
Evaporating temperature t_e : 4.4 °C / 40 °F
Condensing temperature t_c : 38 °C / 100 °F
Refrigerant temperature ahead of valve t_l : 37 °C / 98 °F

Table 22: R407C, Range N -40 – 10 °C / -40 –50 °F, OS = 4 K / 7.2 °F

Valve type	Orifice no.	Rated capacity		Connections solder ODF				Code no. Multi pack
		[KW]	[TR]	Inlet x Outlet		Pressure equalization		
				[inch]	[mm]	[inch]	[mm]	
TGE 10	3	9	2.5	½ x ⅝	–	¼	–	067N4151
TGE 10	3	9	2.5	–	12 × 16	–	6	067N4191
TGE 10	4	13	3.5	½ x ⅞	–	¼	–	067N4152
TGE 10	4	13	3.5	–	12 × 22	–	6	067N4192
TGE 10	6	19	5	½ x ⅝	–	¼	–	067N4153
TGE 10	6	19	5	–	12 × 16	–	6	067N4193
TGE 10	8	25	7	½ x ⅝	–	¼	–	067N4236
TGE 10	8	25	7	⅝ x ⅞	–	¼	–	067N4156

Valve type	Orifice no.	Rated capacity		Connections solder ODF				Code no. Multi pack
		[KW]	[TR]	Inlet x Outlet		Pressure equalization		
				[inch]	[mm]	[inch]	[mm]	
TGE 10	8	25	7	–	16 × 22	–	6	067N4196
TGE 10	11	36	10	5/8 x 7/8	–	1/4	–	067N4157
TGE 10	11	36	10	–	16 × 22	–	6	067N4197
TGE 10	12.5	39	11	5/8 x 7/8	–	1/4	–	067N4410
TGE 10	16	49	14	7/8 x 1 1/8	–	1/4	–	067N4411
TGE 20	12.5	42	12	5/8 x 7/8	–	1/4	–	067N4159
TGE 20	16	53	15	5/8 x 1 1/8	–	1/4	–	067N4161
TGE 20	16	53	15	7/8 x 1 1/8	–	1/4	–	067N4162
TGE 20	20	62	18	7/8 x 1 1/8	–	1/4	–	067N4163
TGE 40	26	84	24	7/8 x 1 3/8	–	1/4	–	067N4165
TGE 40	30	95	27	7/8 x 1 3/8	–	1/4	–	067N4167
TGE 40	40	121	34	1 1/8 x 1 3/8	–	1/4	–	067N4169

The rated capacity is based on:
Evaporating temperature t_e : 4.4 °C / 40 °F
Condensing temperature t_c : 38 °C / 100 °F
Refrigerant temperature ahead of valve t_l : 37 °C / 98 °F

Table 23: R407C, Range N -40 – 10 °C / -40 –50 °F, OS = 4 K / 7.2 °F

Valve type	Orifice no.	Rated capacity		Connections MIO		Code no. Multi pack
		[KW]	[TR]	Inlet x Outlet inch	Pressure equaliza-tion inch	
TGE 10	4	13	3.5	1/2 x 5/8 MIO	1/4 MIO	067N7400
TGE 10	6	19	5	1/2 x 5/8 MIO	1/4 MIO	067N7401
TGE 10	8	25	7	5/8 x 3/4 MIO	1/4 MIO	067N7402
TGE 10	11	36	10	5/8 x 3/4 MIO	1/4 MIO	067N7403

The rated capacity is based on:
Evaporating temperature t_e : 4.4 °C / 40 °F
Condensing temperature t_c : 38 °C / 100 °F
Refrigerant temperature ahead of valve t_l : 37 °C / 98 °F

Table 24: R407C, Range K –25 – 10 °C / –15 – 50 °F with MOP 15 °C / 60 °F, OS = 4 K / 7.2 °F

Valve type	Orifice no.	Rated capacity		Connections solder ODF				Code no. Multi pack
		[KW]	[TR]	Inlet x Outlet		Pressure equalization		
				[inch]	[mm]	[inch]	[mm]	
TGE 10	3	9	2.5	3/8 x 5/8	–	1/4	–	067N4000
TGE 10	3	9	2.5	–	12 × 16	–	6	067N4041
TGE 10	4	13	3.5	1/2 x 7/8	–	1/4	–	067N4002
TGE 10	6	19	5	1/2 x 5/8	–	1/4	–	067N4003
TGE 10	6	19	5	1/2 x 7/8	–	1/4	–	067N4004
TGE 10	8	25	7	5/8 x 7/8	–	1/4	–	067N4006
TGE 10	8	25	7	–	16 × 22	–	6	067N4046
TGE 10	11	36	10	5/8 x 7/8	–	1/4	–	067N4007
TGE 10	11	36	10	–	16 × 22	–	6	067N4047
TGE 10	12.5	39	11	5/8 x 1 1/8	–	1/4	–	067N4400
TGE 10	16	49	14	5/8 x 1 1/8	–	1/4	–	067N4401
TGE 20	12.5	42	12	5/8 x 7/8	–	1/4	–	067N4009
TGE 20	12.5	42	12	5/8 x 1 1/8	–	1/4	–	067N4010
TGE 20	16	53	15	5/8x 1 1/8	–	1/4	–	067N4011
TGE 20	20	62	18	7/8 x 1 1/8	–	1/4	–	067N4013
TGE 40	26	84	24	7/8 x 1 3/8	–	1/4	–	067N4015
TGE 40	30	95	27	7/8 x 1 3/8	–	1/4	–	067N4017
TGE 40	40	121	34	1 1/8 x 1 3/8	–	1/4	–	067N4019

The rated capacity is based on:
Evaporating temperature t_e : 4.4 °C / 40 °F

Condensing temperature t_c : 38 °C / 100 °F
Refrigerant temperature ahead of valve t_l: 37 °C / 98 °F

Table 25: R290[1]), Range N -40 – 10 °C / -40 – 50 °F, OS = 4 K / 7.2 °F

Valve type	Orifice no.	Rated capacity		Connections solder ODF		Code no. Multi pack
		[KW]	[TR]	Inlet x Outlet	Pressure equalization	
				[inch]	[inch]	
TGE 10	6	19	5	5/8 x 7/8	1/4	067N9100
TGE 10	11	36	10	5/8 × 7/8	1/4	067N9103
TGE 20	12.5	44	12	5/8 × 7/8	1/4	067N9104
TGE 20	16	54	15	7/8 × 7/8	1/4	067N9105
TGE 20	20	63	18	7/8 × 7/8	1/4	067N9106

Table 26: R290[1]), Range K –25 – 10 °C / –15 – 50 °F without MOP, OS = 4 K / 7.2 °F

Valve type	Orifice no.	Rated capacity		Connections solder ODF		Code no. Multi pack
				Inlet x Outlet	Pressure equalization	
		[KW]	[TR]	[inch]	[inch]	
TGE 40	26	92	26	7/8 × 7/8	1/4	067N9107
TGE 40	40	133	38	7/8 × 7/8	1/4	067N9109

The rated capacity is based on:
Evaporating temperature t_e : 4.4 °C / 40 °F
Condensing temperature t_c : 38 °C / 100 °F
Refrigerant temperature ahead of valve t_l : 37 °C / 98 °F
[1]) SS = 5K / 9°F (except 067N9100, 067N9103)

Spare parts

Table 27: Bulb straps in Industrial pack

Code.no	Max. tube diameter	Quantity / pack
067N0551	7/8	40
067N0557	2 1/8	40
067N0559	3 1/8	40

Figure 9: Spare parts

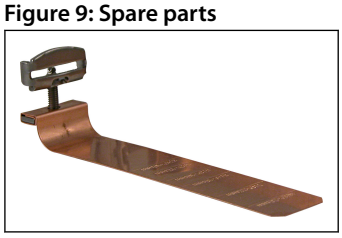

Certificates, declaration and approvals

The list contains all certificates, declarations, and approvals for this product type. Individual code number may have some or all of these approvals, and certain local approvals may not appear on the list.

Some approvals may change over time. You can check the most current status at danfoss.com or contact your local Danfoss representative if you have any questions.

Table 28: Certificates, declaration and approvals

Document name	Document type	Doucment topic	Approval authority
033F4017	Manufacturers Declaration	EN ISO 14903	Danfoss
067R1068	Manufacturers Declaration	PED	Danfoss
033F4011	Manufacturers Declaration	RoHS	Danfoss
033F4006	Manufacturers Declaration	China RoHS	Danfoss
SA 7200	Mechanical - Safety Certificate	UL	UL

ENGINEERING
TOMORROW

Online support

Danfoss offers a wide range of support along with our products, including digital product information, software, mobile apps, and expert guidance. See the possibilities below.

The Danfoss Product Store



The Danfoss Product Store is your one-stop shop for everything product related—no matter where you are in the world or what area of the cooling industry you work in. Get quick access to essential information like product specs, code numbers, technical documentation, certifications, accessories, and more.
Start browsing at store.danfoss.com.

Find technical documentation



Find the technical documentation you need to get your project up and running. Get direct access to our official collection of data sheets, certificates and declarations, manuals and guides, 3D models and drawings, case stories, brochures, and much more.

Start searching now at www.danfoss.com/en/service-and-support/documentation.

Danfoss Learning



Danfoss Learning is a free online learning platform. It features courses and materials specifically designed to help engineers, installers, service technicians, and wholesalers better understand the products, applications, industry topics, and trends that will help you do your job better.

Create your Danfoss Learning account for free at www.danfoss.com/en/service-and-support/learning.

Get local information and support



Local Danfoss websites are the main sources for help and information about our company and products. Find product availability, get the latest regional news, or connect with a nearby expert—all in your own language.

Find your local Danfoss website here: www.danfoss.com/en/choose-region.

Coolselector®2 - find the best components for you HVAC/R system



Coolselector®2 makes it easy for engineers, consultants, and designers to find and order the best components for refrigeration and air conditioning systems. Run calculations based on your operating conditions and then choose the best setup for your system design.

Download Coolselector®2 for free at coolselector.danfoss.com.

Any information, including, but not limited to information on selection of product, its application or use, product design, weight, dimensions, capacity or any other technical data in product manuals, catalogues descriptions, advertisements, etc. and whether made available in writing, orally, electronically, online or via download, shall be considered informative, and is only binding if and to the extent, explicit reference is made in a quotation or order confirmation. Danfoss cannot accept any responsibility for possible errors in catalogues, brochures, videos and other material. Danfoss reserves the right to alter its products without notice. This also applies to products ordered but not delivered provided that such alterations can be made without changes to form, fit or function of the product. All trademarks in this material are property of Danfoss A/S or Danfoss group companies. Danfoss and the Danfoss logo are trademarks of Danfoss A/S. All rights reserved.